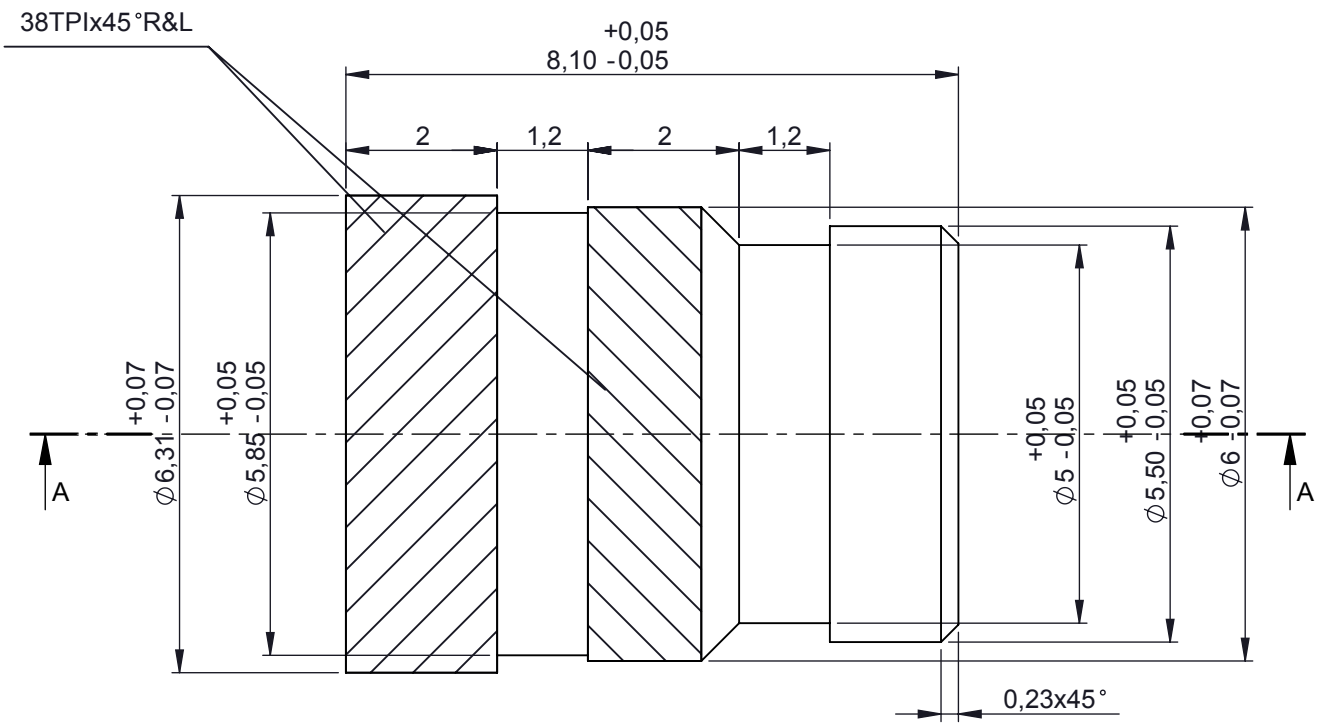

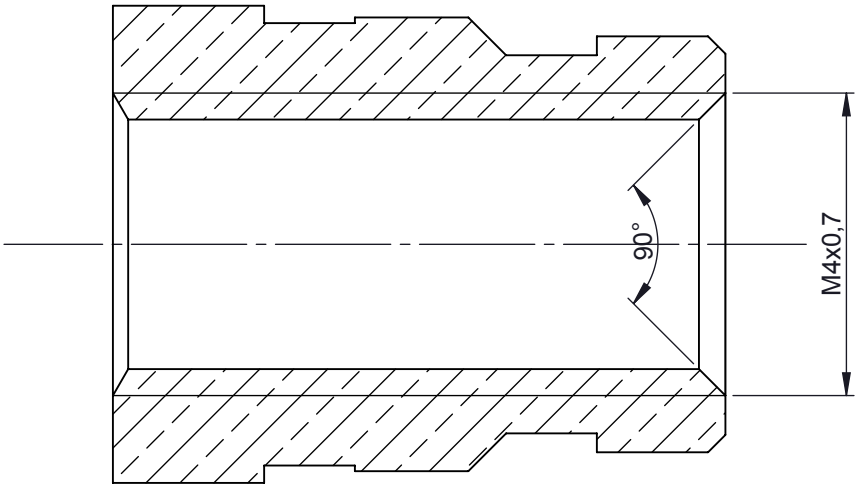

SECTION A-A

	NAME	DATE
DRAWN	Dursun Daşdemir	29.12.07
CHECKED	Ali Altınışık	29.12.07

ALTINKAYA
ENCLOSURES FOR ELECTRONICS
www.altinkaya.com.tr

PROPRIETARY AND CONFIDENTIAL
THE INFORMATION CONTAINED IN THIS DRAWING IS THE SOLE PROPERTY OF ALTINKAYA ENCLOSURES. ANY REPRODUCTION IN PART OR AS A WHOLE WITHOUT THE WRITTEN PERMISSION OF ALTINKAYA ENCLOSURES IS PROHIBITED.

ARTICLE NO:

REVISION:

COMMENTS:
DIMENSIONS ARE IN MILLIMETERS,
DEBUR AND BREAK SHARP EDGES

TITLE:

M4x8 Brass Insert

DWG NO. A-650-0-0-P-0-11295

A4

MATERIAL: Brass RoHS compliant

WEIGHT:

SCALE:10:1

SHEET 1 OF 1